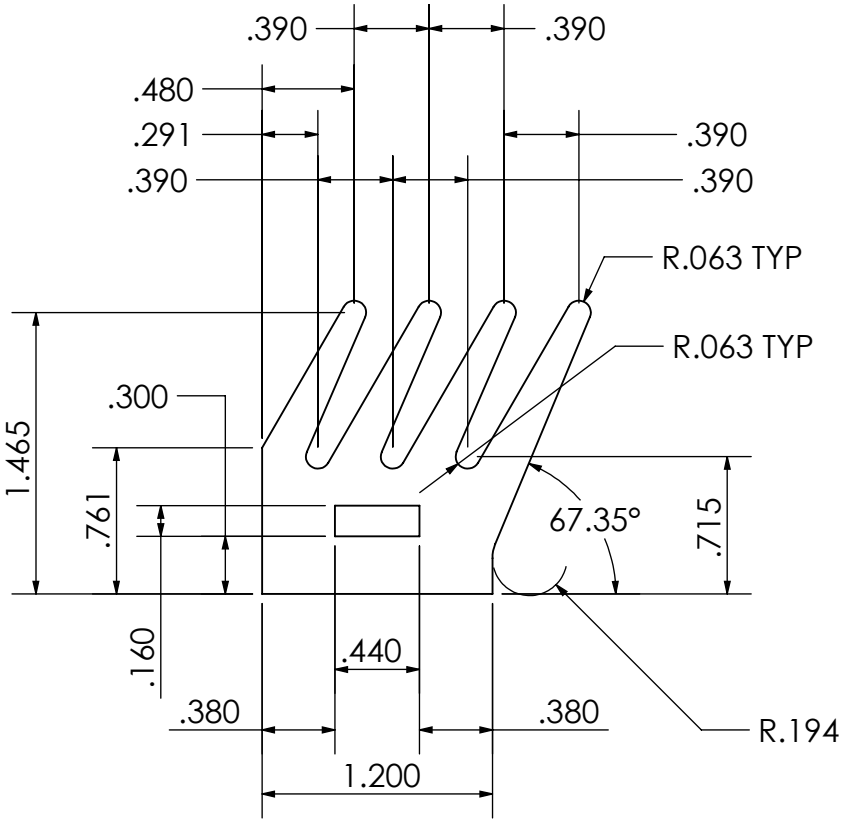

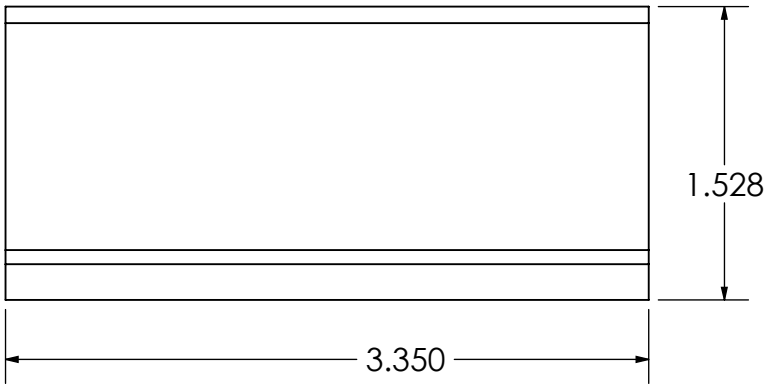

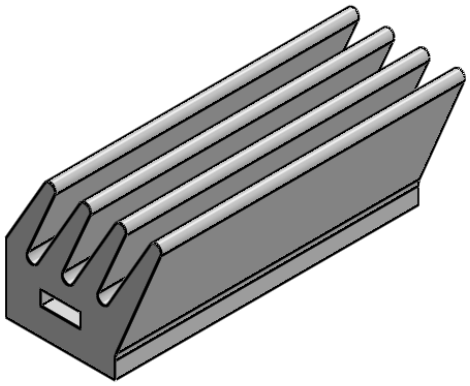

Uni-Spray Systems Inc.
44 Durward Place
Waterloo, Ontario, Canada
N2L 4E4
Tel:519-885-4270 Fax:519-885-4325

Disclaimer:

This drawing is property of Uni-Spray Systems Inc. and contains proprietary information.
It is not to be reproduced without written permission.

Uni-Spray Systems Inc.
Creating Industry Standards Worldwide

NAME	
MATERIAL	
COLOUR	White
DUROMETER	45-50 A
SHRINK	

Description: Four Finger Gripper

SIZE A	DWG NO.	5000-382
	DATE:	October-21-14
SCALE: 1:1	WEIGHT:	SHEET 1 OF 1

5 4 3 2 1